cavagna group

Wherever gas is used, we are there

Valves, Regulators & Filling Heads for Refrigerant Gases

2022-2023 EDITION

cavagna group

Wherever gas is used, we are there

Solutions

LPG SOLUTIONS

COMPRESSED GASES SOLUTIONS

NATURAL GAS SOLUTIONS

ALTERNATIVE FUEL SYSTEMS

GAS METERING SOLUTIONS

INDUSTRIAL PROCESS MANAGEMENT

cavagna group

Wherever gas is used, we are there

The Cavagna Group began operation in 1949 in Northern Italy and continues to grow today. Since its origin, the Group has become a world leader in the forging and machining of brass and stainless steel.

For over seventy years the Group has supplied safe products of superior quality and value. Technological advancement and sophisticated working procedures have allowed us to rapidly create new products and solutions for the gas control industry.

The Cavagna Group produces a wide range of products meeting international standards including:

- LPG Valves, Equipment and Regulators
- Engineering and Services dedicated to the LPG industry
- ASME, Fork Lift and Motor Fuel Tank Valves
- Natural Gas regulators for domestic, commercial and industrial use
- Gas meters
- Compressed Gases Cylinder Valves
- Specialty Gases Cylinder Valves
- Refrigerant Gases Cylinder Valves
- Regulation Equipment for Industrial Gases
- Regulation Equipment for Medical Gases
- Comprehensive Range of Welding, Cutting Equipment
- CNG - H2 - AUTOGAS cylinder valves and filling valves
- CNG - AUTOGAS systems

The Group's design engineers and laboratory technicians closely cooperate with worldwide regulatory institutions, both in the writing of international performance standards and in the creation of new products.

The Cavagna Group of companies has invested heavily in personnel, individual training, and robotic technology to meet the quality standards required by our customers and the 150 countries we serve.

Our philosophy is to provide all of our customers with quality products, continuous innovation and superior service in a competitive environment.

SINGLE PHASE DIAPHRAGM VALVES
for flammable Refrigerant Gas

Features

- Brass cylinder valve for refrigerant and cooling applications using halocarbons
- Permanent gas tight seal
- π marking according TPED directive and EN ISO 10297
- Spring Loaded PRV or Bursting disk
- Tube quick connection

Options

- Customer's logo on label
- Cap nuts
- Liquid withdrawal tubes quick connection
- Anti-Filling device (Rubber or Metal seal):
  - Removable
  - Unremovable
  - Breakable
- Red or Blue plastic handwheel with green label
- Plastic inlet/outlet thread protection
- PRV plastic red cap
- Plastic sediment tube
- Dry sealant inlet thread
- PTFE taped inlet thread

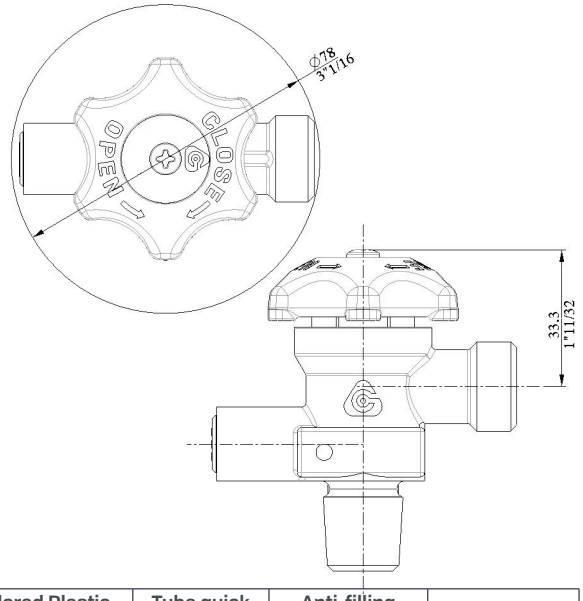

Specifications

Test pressure	55 bar / 800 psi
Service temperatures	-20°C up to + 65°C
Seat orifice size	8 mm
Helium leak rate at Pmax	internal 4,3 10^{-3} mbarl/sec external 4,3 10^{-3} mbarl/sec
Material	Body: brass Handwheel: plastic Seat Pad: PA66 Diaphragm: stainless steel Withdrawal tube: PA
Inlet and outlet connections	According to country standards

Product details*

Part Number	Inlet	Outlet	Safety Devices	Colored Plastic Handwheel	Tube quick connection	Anti-filling device	Homologation
7601900420	17E	W21.8x1/14"-LH	PRV 48 bar	Blue (Vapor) + Green label	No	Installed	π
7601900500	25E						
7601900429			PRV 42 bar				
7601900447			N.A.	Red (Liquid) + Green label	Yes		
7601900448	17E						
7601900473	25E					Available	
7601900476		W21.7x1/14"-LH		Red (Liquid) + Green label / Green Handwheel		Installed	

* Here are some examples of codes which are purely indicative of refrigerant valves; contact our sales department for further details.

SINGLE PHASE DIAPHRAGM VALVES
for inert Refrigerant Gas

Features

- Brass cylinder valve for refrigerant and cooling applications using halocarbons
- Permanent gas tight seal
- π marking according TPED directive and EN ISO 10297
- Ⓤ Listed According UL 1769
- Spring Loaded PRV or Bursting disk
- Tube quick connection

Options

- Customer's logo on label
- Cap nuts
- Liquid withdrawal tubes quick connection
- Anti-Filling device (Rubber or Metal seal):
  - Removable
  - Unremovable
  - Breakable
- Red or Blue plastic handwheel
- Plastic inlet/outlet thread protection
- PRV plastic red cap
- Spring Loaded PRV cartridge
- Dry sealant inlet thread
- PTFE taped inlet thread

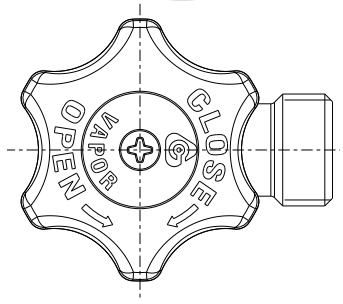

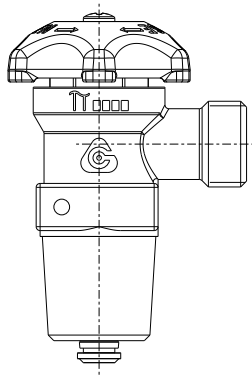

Specifications

Test pressure	55 bar / 800 psi
Service temperatures	-20°C up to + 65°C
Seat orifice size	8 mm
Helium leak rate at Pmax	internal 4,3 10^{-3} mbarl/sec external 4,3 10^{-3} mbarl/sec
Material	Body: brass Handwheel: plastic Seat Pad: PA66 Diaphragm: stainless steel Withdrawal tube: PA
Inlet and outlet connections	According to country standards and all requirements of : CGAV9 / CGA s-11 / CGA V-1 / ISO 10297

Product details*

Part Number	Inlet	Outlet 1	Safety Devices	Colored Plastic Handwheel	Tube quick connection	Anti-filling device	Homologation
7601900333	25E	W21.8x1/14"	Bursting Disk 43 bar	Blue (Liquid)	Yes	Installed	π
7601900430		W21.7x1/14"	PRV 42 bar	Blue (Vapor)	No		
7601900450			No	Red (Liquid)	Yes	Not Applicable	
7601900481		W21.8X1/14" - LH		Red (Vapor)		Installed	
7601900454	3/4"-14 NGT	CGA 660		Blue (Vapor)		Not Applicable	Ⓤ
7601900455				Red (Liquid)			
7601900484	17E	W21.8x1/14"	PRV 48 bar	Blue (Liquid)	No	Installed	π
7601900497		W21.8X1/14" - LH					
7601900499	25E	W21.8x1/14"					
7601900501			No	Red (Liquid)	Yes		

* Here are some examples of codes which are purely indicative of refrigerant valves; contact our sales department for further details.

DOUBLE PHASE DIAPHRAGM VALVES
for flammable Refrigerant Gas

Features

- Brass cylinder valve for refrigerant and cooling applications using halocarbons
- Permanent gas tight seal
- π marking according TPED directive and EN ISO 10297
- Spring Loaded PRV
- Single or Double outlet
- Tube quick connection

Options

- Customer's logo on label
- Cap nuts
- Liquid withdrawal tubes quick connection
- Anti-Filling device (Rubber or Metal seal):
  - Removable
  - Unremovable
  - Breakable
- Red and Blue plastic handwheel with green label
- Plastic inlet/outlet thread protection
- PRV plastic red cap
- Spring Loaded PRV Cartridge
- Dry sealant inlet thread
- PTFE taped inlet thread

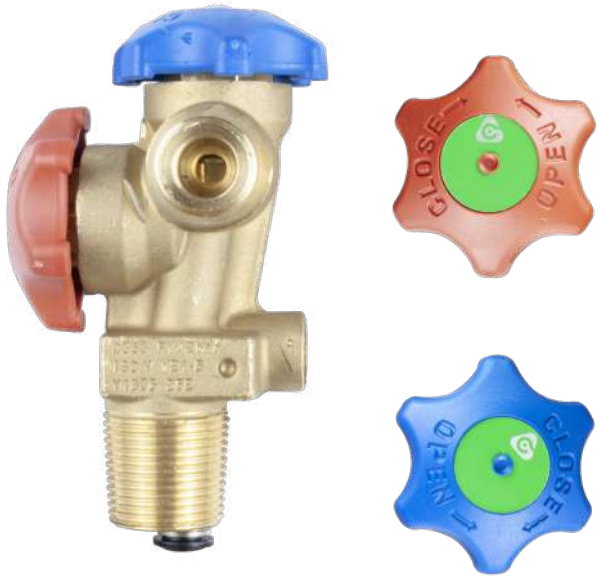

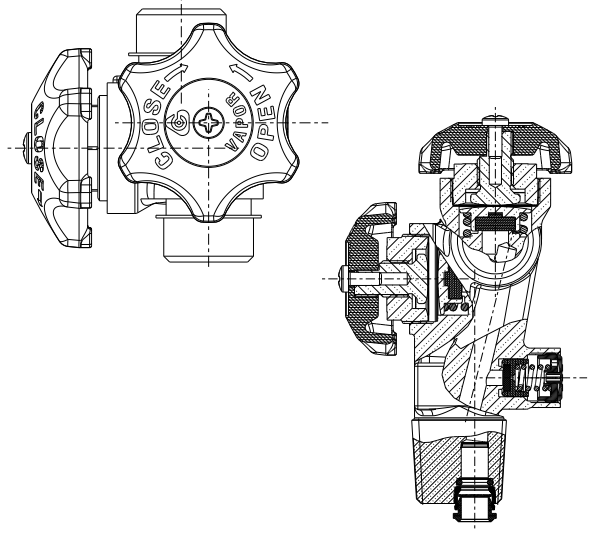

Specifications

Test pressure	55 bar / 800 psi
Service temperatures	-20°C up to + 65°C
Seat orifice size	8 mm
Helium leak rate at Pmax	internal 4,3 10^{-3} mbarl/sec external 4,3 10^{-3} mbarl/sec
Material	Body: brass Handwheel: plastic Seat Pad: PA66 Diaphragm: stainless steel Withdrawal tube: PA
Inlet and outlet connections	According to country standards

Product details*

Part Number	Inlet	Outlet 1	Outlet 2	Safety Devices	Colored Plastic Handwheel	Tube quick connection	Anti-filling device	Homologation
7601900427	25E	W21.8x1/14"-LH	No	PRV 42 bar	Blue (Vapor) + Green label / Red (Liquid) + Green label	Yes	Installed	π
7601900428			No	No			Available	
7601900440			W21.8x1/14"-LH	No				
7601900464			W21.8x1/14"-LH	PRV 48 bar				

* Here are some examples of codes which are purely indicative of refrigerant valves; contact our sales department for further details.

DOUBLE PHASE DIAPHRAGM VALVES
for inert Refrigerant Gas

Features
- Brass cylinder valve for refrigerant and cooling applications using halocarbons
- Permanent gas tight seal
- π marking according TPED directive and EN ISO 10297
- Ⓤ Listed According UL 1769
- Spring Loaded PRV or Bursting disk
- Single or Double outlet
- Tube quick connection

Options
- Customer's logo on label
- Cap nuts
- Liquid withdrawal tubes quick connection
- Anti-Filling device:
  - Removable
  - Unremovable
  - Breakable
- Red and Blue plastic handwheel
- Plastic inlet/outlet thread protection
- PRV plastic red cap
- Spring Loaded PRV Cartridge
- Dry sealant inlet thread
- PTFE taped inlet thread

Specifications

Test pressure	55 bar / 800 psi
Service temperatures	-20°C up to + 65°C
Seat orifice size	8 mm
Helium leak rate at Pmax	internal 4,3 10^{-3} mbarl/sec external 4,3 10^{-3} mbarl/sec
Material	Body: brass Handwheel: plastic Seat Pad: PA66 Diaphragm: stainless steel Withdrawal tube: PA
Inlet and outlet connections	According to country standards

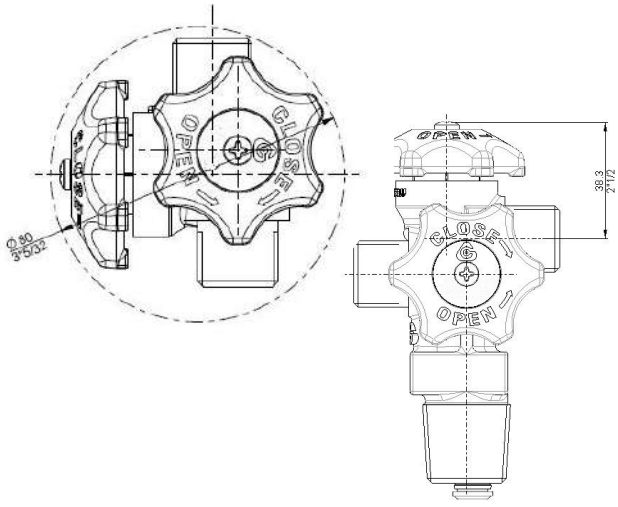

Product details*

Part Number	Inlet	Outlet 1	Outlet 2	Safety Devices	Colored Plastic Handwheel	Tube quick connection	Anti-filling device	Homologation
7601900167	25E	W21.7x1/14"	No	PRV 42 bar	Blue (Vapor) / Red (Liquid)	Yes	Available	π
7601900169	3/4-14 NGT	1.030-14 NGO-RH-EXT (CGA 660)	1.030-14 NGO-RH-EXT (CGA660)	PRV 600 PSI			Not Applicable	
7601900354	25E	W21.7x1/14"	W21.7x1/14"	PRV 42 bar			Available	
7601900390		W21.8x1/14"	W21.8x1/14"	No				
7601900393		G5/8"A	G5/8"A	PRV 42 bar				
7601900422			No					
7601900187		W21.8x1/14"	W21.8x1/14"				Installed	
7601900453	3/4"-14 NGT 7 Oversize CGA V-1	CGA 660	CGA 660	PRV 600 PSI			Not Applicable	Ⓤ
7601900240	3/4"-14 NGT							
7601900495	25E	W21.7x1/14"	W21.7x1/14"	PRV 48 bar			Available	π
7601900502			No				Installed	

* Here are some examples of codes which are purely indicative of refrigerant valves; contact our sales department for further details.

Y VALVES
for flammable Refrigerant Gas

Features

- Valve for gas recovery
- Brass cylinder valve for refrigerant and cooling applications using halocarbons
- Double O-Ring valve operating mechanism
- Permanent gas tight seal
- π marking according TPED directive and EN ISO 10297
- Ⓤ Listed according UL 1769
- Spring Loaded PRV or Bursting Disk
- Single or Double outlet
- Tube quick connection

Options

- Customer's logo on label
- Liquid withdrawal tubes quick connection
- Anti-Filling device (Rubber or Metal seal):
  - Removable
  - Unremovable
  - Breakable
- Red and Blue plastic handwheel with green label
- Plastic inlet/outlet thread protection
- PRV plastic red cap
- Dry sealant inlet thread
- PTFE taped inlet thread

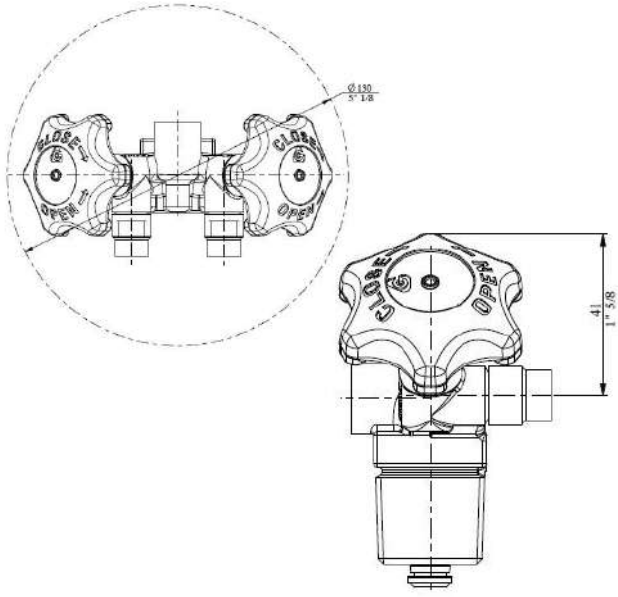

Specifications

Test pressure	55 bar / 800 psi
Service temperatures	-20°C up to + 65°C
Seat orifice size	4 mm
Helium leak rate at Pmax	internal 4,3 10^{-3} mbarl/sec external 4,3 10^{-3} mbarl/sec
Material	Body: brass Handwheel: plastic Seat Pad: PA66 O-ring: CR Rubber Withdrawal tube: PA
Inlet and outlet connections	According to country standards

Product details*

Part Number	Inlet	Outlet 1	Outlet 2	Safety Devices	Colored Plastic Handwheel	Tube quick connection	Anti-filling device	Homologation
7601900445	¾ - 14 NGT	½"-16 ACME-LH-CGA166	½"-16 ACME-LH-CGA166	PRV 600 PSI	Blue (Liquid) / Red (Vapor)	Yes	Not Applicable	Ⓤ
7601900446	¾ - 14 NGT			PRV 375 PSI				
7601900449	25E			PRV 42 bar	Blue (Vapor) + Green label / Red (Liquid) + Green label			π

* Here are some examples of codes which are purely indicative of refrigerant valves; contact our sales department for further details.

Y VALVES
for inert Refrigerant Gas

Features

- Brass cylinder valve for refrigerant and cooling applications using halocarbons
- Double O-Ring valve operating mechanism
- Permanent gas tight seal
- π marking according TPED directive and EN ISO 10297
- Ⓤ Listed according UL 1769
- Spring Loaded PRV or Bursting Disk
- Single or Double outlet
- Tube quick connection

Options

- Customer's logo on label
- Liquid withdrawal tubes quick connection
- Anti-Filling device (Rubber or Metal seal):
  - Removable
  - Unremovable
  - Breakable
- Red and Blue plastic handwheel
- Plastic inlet/outlet thread protection
- PRV plastic red cap
- Dry sealant inlet thread
- PTFE taped inlet thread

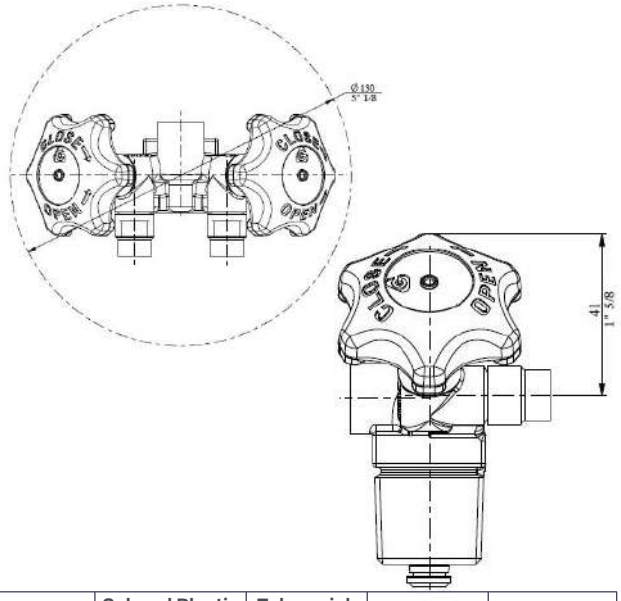

Specifications

Test pressure	55 bar / 800 psi
Service temperatures	-20°C up to + 65°C
Seat orifice size	4 mm
Helium leak rate at Pmax	internal 4,3 10^{-3} mbarl/sec external 4,3 10^{-3} mbarl/sec
Material	Body: brass Handwheel: plastic Seat Pad: PA66 O-ring: CR Rubber Withdrawal tube: PA
Inlet and outlet connections	According to country standards

Product details*

Part Number	Inlet	Outlet 1	Outlet 2	Safety Devices	Colored Plastic Handwheel	Tube quick connection	Anti-filling	Homologation
7601900184	25E	¼" SAE FLARE (CGA 165)	¼" SAE FLARE (CGA 165)	PRV 42 bar	Blue (Vapor) / Red (Liquid)	Yes	Not Applicable	π
7601900214	¾ - 14 NGT			PRV 600 PSI				π and Ⓤ
7601900220	25E	1.030"-14 NGO-RH-EXT (CGA 660)	No	PRV 42 bar			Available	π
7601900362	25E	¼" SAE FLARE (CGA 165)	¼" SAE FLARE (CGA 165)	PRV 46 bar			Not Applicable	
7601900466	25E	W21.7x1.814	No	Bursting Disk 43 Bar				
7601900224	3/4"	CGA 165	CGA 165	PRV 600 PSI	Blue (Liquid) / Red (Vapor)			Ⓤ
7601900257	3/4"-14 NGT			PRV 600 PSI				
7601900269	25E			PRV 600 PSI				π

* Here are some examples of codes which are purely indicative of refrigerant valves; contact our sales department for further details.

O-RING VALVES
for flammable Refrigerant Gas

Features

- Brass cylinder valve for refrigerant and cooling applications using halocarbons
- Double O-Ring valve operating mechanism
- Permanent gas tight seal
- π marking according TPED directive and EN ISO 10297
- Ⓤ Listed according UL 1769
- Spring Loaded PRV

Options

- Customer's logo on label
- Cap nuts available
- Liquid withdrawal tubes quick connection
- Anti-Filling device (Rubber or Metal seal):
  - Removable
  - Unremovable
  - Breakable
- Brass handwheel
- Plastic inlet/outlet thread protection
- PRV plastic red cap
- Dry sealant inlet thread
- PTFE taped inlet thread

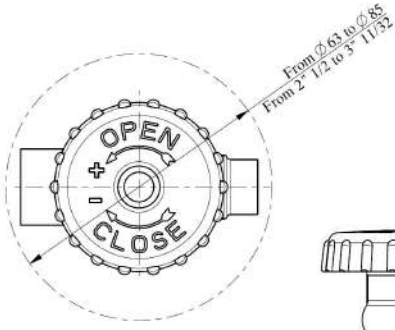

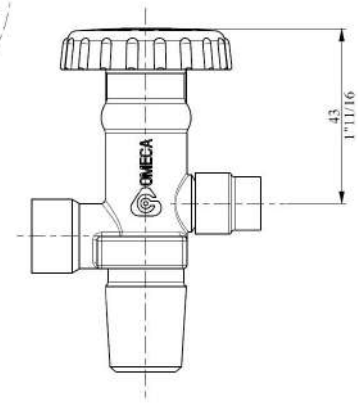

Specifications

Test pressure	55 bar / 800 psi
Service temperatures	-20°C up to + 65°C
Seat orifice size	7 mm
Helium leak rate at Pmax	internal 4,3 10^{-3} mbarl/sec external 4,3 10^{-3} mbarl/sec
Material	Body: brass Handwheel: brass Seat Pad: PA66 O-ring: CR Rubber Withdrawal tube: PA
Inlet and outlet connections	According to country standards

Product details*

Part Number	Inlet	Outlet	Safety Devices	Tube quick connection	Anti-filling device	Homologation
7601900452	17E	1/2"-16 ACME-LH (CGA166)	PRV 42 bar	No	Not Applicable	π and Ⓤ
7601900310	25E	W21.8x1/14" DIN 477	N.A.	Yes	Installed	π
7601900328	17E	W21.8x1/14"				
7601900330						
7601900406	25E	1.030-14 NGO LH	PRV 42 bar	No		

* Here are some examples of codes which are purely indicative of refrigerant valves; contact our sales department for further details.

O-RING VALVES
for inert Refrigerant Gas

Features

- Brass cylinder valve for refrigerant and cooling applications using halocarbons
- Double O-Ring valve operating mechanism
- Permanent gas tight seal
- π marking according TPED directive and EN ISO 10297
- Ⓤ Listed according UL 1769
- Spring Loaded PRV

Options

- Customer's logo on label
- Cap nuts available
- Liquid withdrawal tubes quick connection
- Anti-Filling device (Rubber or Metal seal):
  - Removable
  - Unremovable
  - Breakable
- Brass handwheel
- Plastic inlet/outlet thread protection
- PRV plastic red cap
- Dry sealant inlet thread
- PTFE taped inlet thread

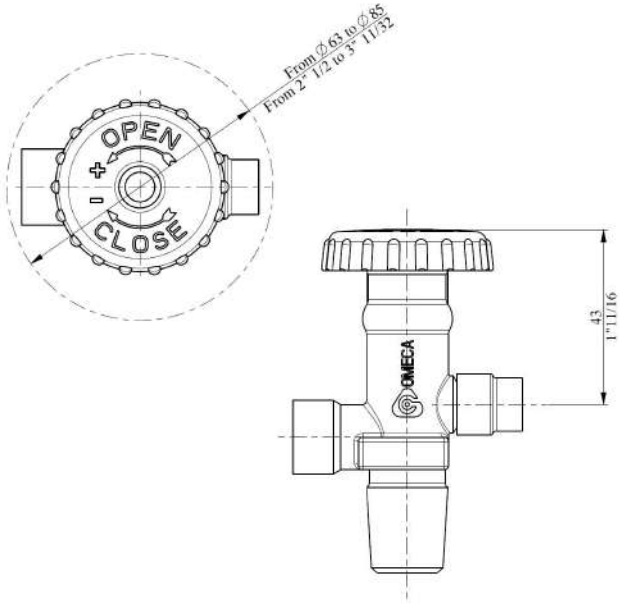

Specifications

Test pressure	55 bar / 800 psi
Service temperatures	-20°C up to + 65°C
Seat orifice size	7 mm
Helium leak rate at Pmax	internal 4,3 10^{-3} mbarl/sec external 4,3 10^{-3} mbarl/sec
Material	Body: brass Handwheel: brass Seat Pad: PA66 O-ring: CR Rubber Withdrawal tube: PA
Inlet and outlet connections	According to country standards

Product details*

Part Number	Inlet	Outlet	Safety Devices	Tube quick connection	Anti-filling device	Homologation
7601900192	17E	7/16" (CGA 165)	PRV 42 bar	No	Not Applicable	π
7601900330		W21.8x1/14"	N.A.	Yes	Installed	
8008907007	25E			No	Not Applicable	
8008908153		7/16" (CGA 165)	PRV 42 bar			
7661900315	17E	W21.8x1/14"-LH				

* Here are some examples of codes which are purely indicative of refrigerant valves; contact our sales department for further details.

VALVES
for flammable Refrigerant Gas

Features

- Brass cylinder valve for refrigerant and cooling applications using halocarbons
- Permanent gas tight seal
- π marking according TPED directive and EN ISO 10297
- Ⓤ Listed according UL 1769
- Spring Loaded PRV Cartridge
- Single outlet
- Tube quick connection
- Pneumatically activated Anti-Filling rubber seal

Options

- Customer's logo on label
- Cap nuts
- Liquid withdrawal tubes quick connection
- Red and Blue plastic handwheel with green label
- Plastic inlet/outlet thread protection
- PRV plastic red cap
- Dry sealant inlet thread
- PTFE taped inlet thread

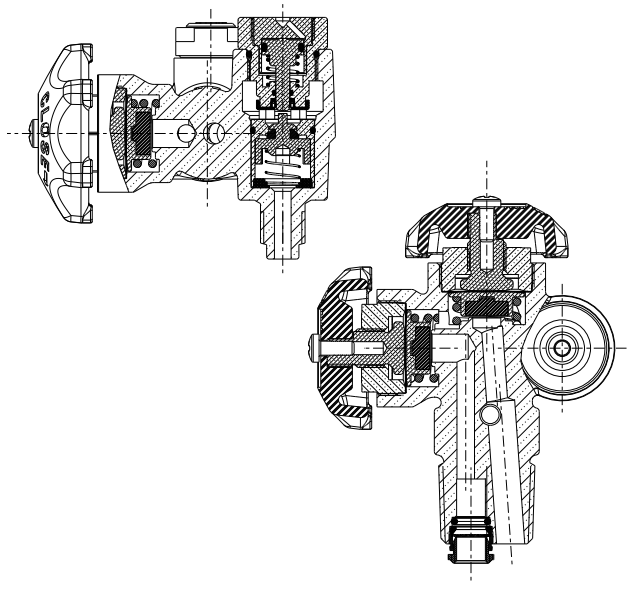

Specifications

Test pressure	55 bar / 800 psi
Service temperatures	-20°C up to + 65°C
Seat orifice size	8 mm
Helium leak rate at Pmax	internal 4,3 10^{-3} mbarl/sec external 4,3 10^{-3} mbarl/sec
Material	Body: brass Handwheel: plastic Seat Pad: PA66 Diaphragm: stainless steel Withdrawal tube: PA
Inlet and outlet connections	According to country standards

Product details*

Part Number	Inlet	Outlet	Safety Devices	Colored Plastic Handwheel	Tube quick connection	Anti-filling	Homologation
7601900479	¾ - 14 NGT	1/2"-16 ACME-LH (CGA166)	PRV 600 PSI	Blue (Vapor) / Red (Liquid)	Yes	Installed	Ⓤ and π
7601900498			PRV 375 PSI			Not Applicable	Ⓤ

* Here are some examples of codes which are purely indicative of refrigerant valves; contact our sales department for further details.

VALVES
for inert Refrigerant Gas

Features

- Brass cylinder valve for refrigerant and cooling applications using halocarbons
- Permanent gas tight seal
- π marking according TPED directive and EN ISO 10297
- Ⓤ Listed according UL 1769
- Spring Loaded PRV Cartridge
- Single outlet
- Tube quick connection
- Pneumatically activated Anti-Filling rubber seal

Options

- Customer's logo on label
- Cap nuts
- Liquid withdrawal tubes quick connection
- Red and Blue plastic handwheel
- Plastic inlet/outlet thread protection
- PRV plastic red cap
- Dry sealant inlet thread
- PTFE taped inlet thread

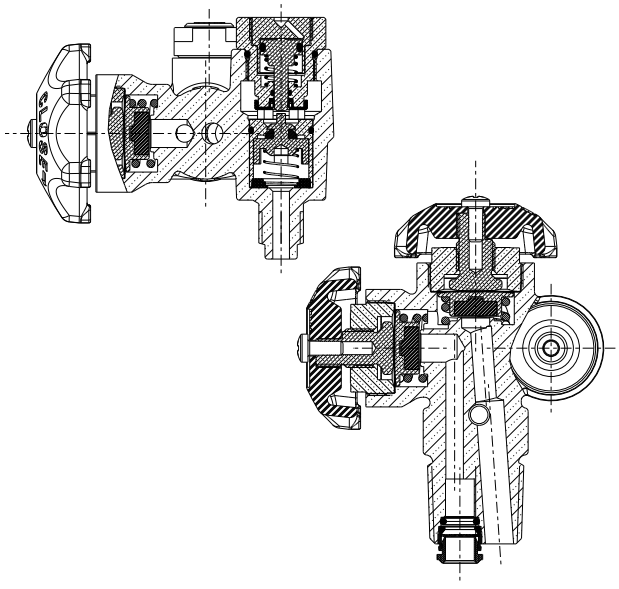

Specifications

Test pressure	55 bar / 800 psi
Service temperatures	-20°C up to + 65°C
Seat orifice size	8 mm
Helium leak rate at Pmax	internal 4,3 10^{-3} mbarl/sec external 4,3 10^{-3} mbarl/sec
Material	Body: brass Handwheel: plastic Seat Pad: PA66 Diaphragm: stainless steel Withdrawal tube: PA
Inlet and outlet connections	According to country standards

Product details*

Part Number	Inlet	Outlet	Safety Devices	Colored Plastic Handwheel	Tube quick connection	Anti-filling device	Homologation
7601900469	¾ - 14 NGT	CGA 165**	PRV 600 PSI	Blue (Vapor) / Red (Liquid)	Yes	Installed	Ⓤ and π
7601900480		CGA 167					

**for applications using HFO 12347F

* Here are some examples of codes which are purely indicative of refrigerant valves; contact our sales department for further details.

Y VALVES
for HFO R1234YF Refrigerant Gas

Features

- Brass cylinder valve for refrigerant and cooling applications using halocarbons
- Double O-Ring valve operating mechanism
- Permanent gas tight seal
- π marking according TPED directive and EN ISO 10297
- Ⓤ Listed according UL 1769
- Spring Loaded PRV or Bursting Disk
- Single or double outlet
- Tube quick connection

Options

- Customer's logo on label
- Liquid withdrawal tubes quick connection
- Anti-Filling device (Rubber or Metal seal):
  - Removable
  - Unremovable
  - Breakable
- Colored plastic handwheel: red, blue
- Plastic inlet/outlet thread protection
- PRV plastic red cap
- Dry sealant inlet thread
- PTFE taped inlet thread

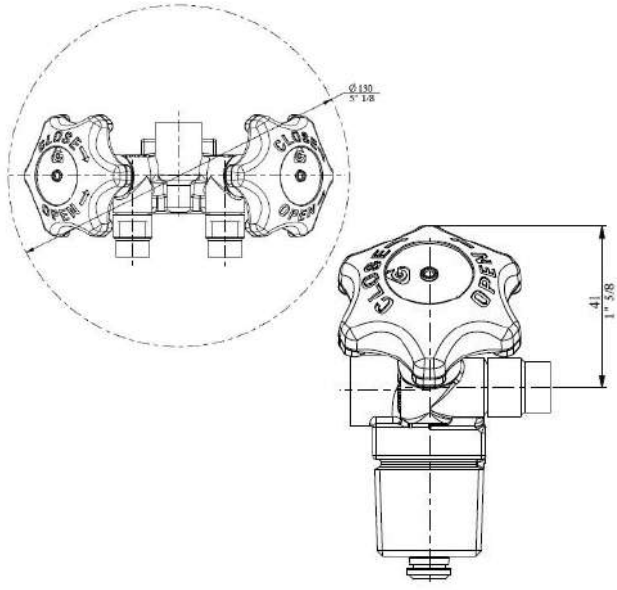

Specifications

Test pressure	55 bar / 800 psi
Service temperatures	-20°C up to + 65°C
Seat orifice size	4 mm
Helium leak rate at Pmax	internal 4,3 10^{-3} mbarl/sec external 4,3 10^{-3} mbarl/sec
Material	Body: brass Handwheel: plastic Seat Pad: PA66 Diaphragm: CR Rubber Withdrawal tube: PA
Inlet and outlet connections	According to country standards

Product details*

Part Number	Inlet	Outlet 1	Outlet 2	Safety Devices	Colored Plastic Handwheel	Tube quick connection	Anti-filling device	Homologation
7601900445	3/4"-14 NGT	1/2"-16 ACME-LH	1/2"-16 ACME-LH	PRV 600 PSI	Blue (Liquid) - Red (Vapor)	Yes	Not Applicable	Ⓤ
7601900446				PRV 375 PSI				

* Here are some examples of codes which are purely indicative of refrigerant valves; contact our sales department for further details.

HIGH FLOW VALVES
for Refrigerant Gas

Features

- Brass cylinder valve for refrigerant and cooling applications using halocarbons
- Permanent gas tight seal
- π marking according TPED directive and EN ISO 10297
- CE marking according to PED directive and EN 10297
- Spring Loaded PRV
- Single outlet
- High flow capacity

Options

- Customer's logo on label
- Cap nuts
- Anti-Filling device (Rubber seal)
- Plastic inlet/outlet thread protection
- PRV plastic red cap
- Dry sealant inlet thread
- PTFE taped inlet thread
- Residual Pressure

Specifications

Test pressure	55 bar / 800 psi
Service temperatures	-20°C up to + 65°C
Seat orifice size	16 mm
Helium leak rate at Pmax	internal 4,3 10^{-3} mbarl/sec external 4,3 10^{-3} mbarl/sec
Material	Body: brass Handwheel: Aluminum Seat Pad: PTFE O-ring: CR Rubber
Inlet and outlet connections	According to country standards

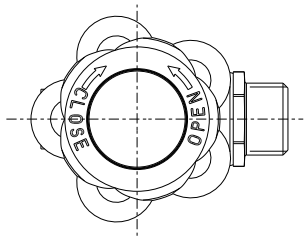

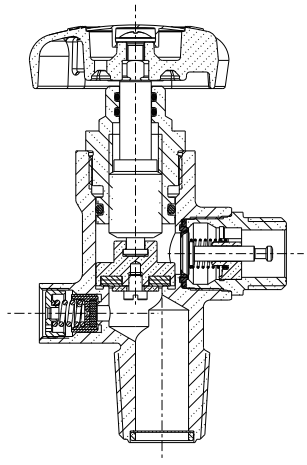

Product details*

Part Number	Inlet	Outlet	Safety Devices	Colored Plastic Handwheel	Tube quick connection	Anti-filling device	Homologation
7601900137	25E	W21.7 x 1/14"	PRV 600 PSI	Metallic Grey + Blue Cap	Yes	Installed	π
7601900099		1.030-14 MGO-RH-EXT	N.A.		Not Applicable	Not Applicable	CE
7601900451		W21.8 x1/14" LH	PRV 600 PSI	Metallic Grey + Green Cap		Installed	π

* Here are some examples of codes which are purely indicative of refrigerant valves; contact our sales department for further details.

PRESSURE RELIEF VALVES
for Refrigerant Gas

Features

- Brass pressure relief valve for refrigerant and cooling applications using halocarbons
- Permanent gas tight seal
- Spring Loaded PRV

Specifications

Test pressure	55 bar / 800 psi
Service temperatures	-20°C up to + 65°C
Seat orifice size	5 mm
Helium leak rate at Pmax	internal 4,3 10^{-3} mbarl/sec external 4,3 10^{-3} mbarl/sec

Product details*

Part Number	Inlet	Safety Devices
6602901276	M19x1	PRV 375 PSI

* Here are some examples of codes which are purely indicative of refrigerant valves; contact our sales department for further details.

LIQUID WITHDRAWAL TUBES
Quick Connection

CavagnaGroup® offers a wide range of tubes and tools to complement its refrigerant gas cylinder valves line.

Specifications

- Tube with or without filter
- Ø available: Ø6, Ø8 and Ø10
- Length available: on request
- Material available: PA

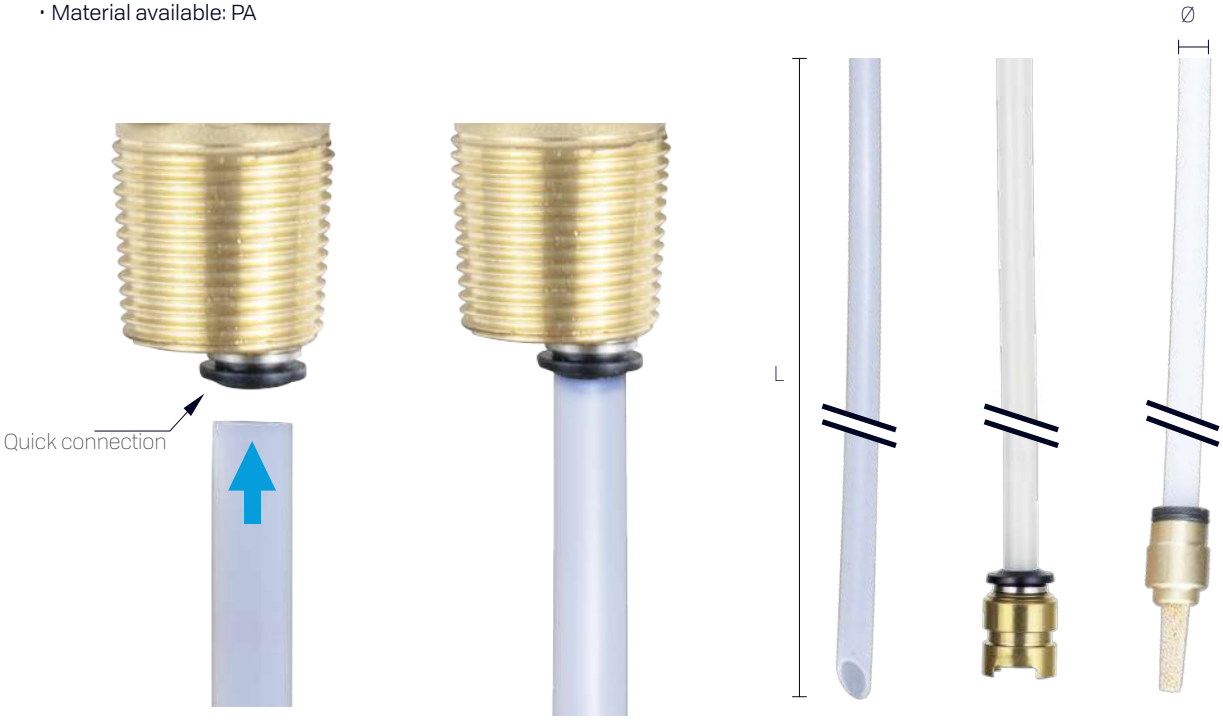

Available tools to install and to remove

- Anti-Filling Breakable Version
- Anti-Filling Removable Version
- Anti-Filling Unremovable Version

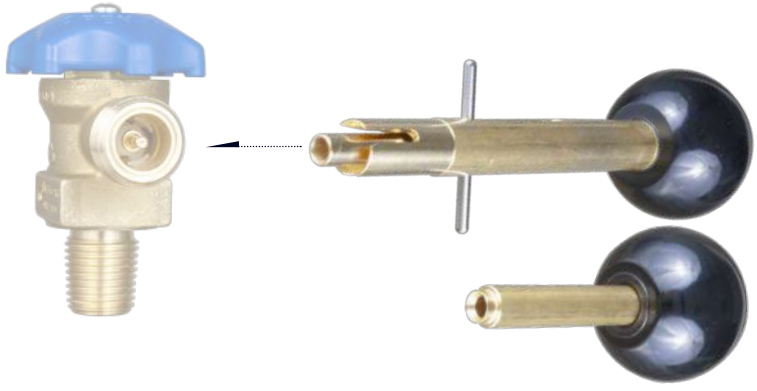

* Here are some examples of codes which are purely indicative of refrigerant valves; contact our sales department for further details.

Y VALVES
for CO_2

Features

- Anti-filling device
- Brass Cylinder valve for CO2 refrigerant application
- Permanent gas tight seal
- Bursting disk
- Dual outlet
- Residual pressure (3-5 bar)
- Tube threaded connection

Options

- Customer's logo on label
- Different bursting disk settings
- Different threaded connections
- Filling connectors: ACRA020300

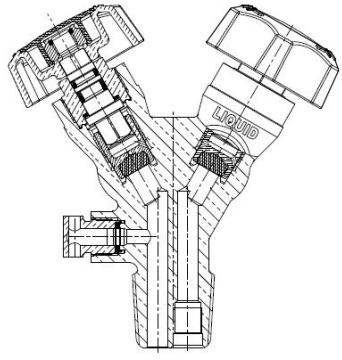

Specifications

Test pressure	250 bar / 3600 psi
Service temperatures	-40°C up to + 65°C
Seat orifice size	Ø 8 mm
Pin range	2.5 mm
Residual pressure range	3-5 bar
Material	Seat Pad: PA66 Antifriction ring: PA6 Antiextrusion ring: PA6 Toroidal rings: EPDM Spring: Stainless steel Residual piston: Brass
Inlet and outlet connections	According to country standards

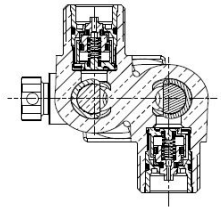

Product details*

Part Number	Inlet	Outlet	Safety Devices	Colored Plastic Handwheel	Tube quick connection	Anti-filling device	Homologation
VGF9RAC023	25E	W21.7x1/14" W21.7x1/14"	RPV 250 bar	Blue (Vapor) / Red (Liquid)	no	Installed	π
VGF9RAC016		.860"-14 TPI .860"-14 TPI					
VGF9RAC017		W21.7x1/14" W21.7x1/14"					

* Here are some examples of codes which are purely indicative of refrigerant valves; contact our sales department for further details.

VALVES
for Ammonia (NH_3)

Features

- Steel of stainless steel body
- π marked
- Permanent gas tight seal
- Single outlet

Options

- Customer's logo
- Outlet cap
- Anti-filling device (Metal seal)

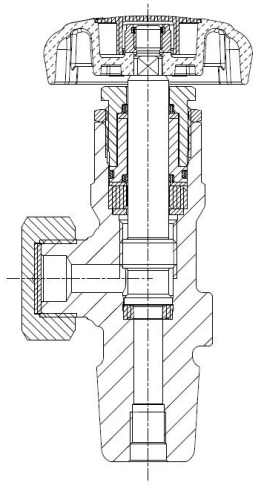

Specifications

Test pressure	33 bar / 480 psi
Service temperatures	-40°C up to + 65°C
Seat orifice size	Ø 8.2 mm
Material	Seat pad: KEL-F Antifriction ring: PTFE +20% F.G. Toroidal rings: EPDM
Inlet and outlet connections	According to country standards

Product details*

Part Number	Inlet	Outlet	Safety Devices	Colored Plastic Handwheel	Tube quick connection	Anti-filling device	Homologation
VGD4IAM501	25E	W21.8	N.A.	Metallic Grey + Blue Cap	no	Not Applicable	π
VGD4IAM517							
VGD4IAM001		W21.8x1/14"					
VGD4IAM005	3/4"-14 NGT	3/8"-18 NGT					
VGD4IAM018	25E	W30x1/14"				Available	

* Here are some examples of codes which are purely indicative of refrigerant valves; contact our sales department for further details.

NITROGEN REGULATOR

Series 5200 Single Stage used in the Refrigerant Flush Systems

Features

The Nitrogen 5200-Series regulator is used in the Refrigerant Flush System and it is designed specifically to meet HVAC/R and automotive A/C systems requirements.

- AS4267:1995 Compliance
- Gauges ISO 5171 (rubber protection available)
- Different position configuration available
- Additional inlet filter on demand
- Inlet&Outlet on customer's request
- Safety Device available on demand
- Panel mount thread available on demand

Specifications

Materials Brass Component: CW508L, CW603N, CW614N, CW617N
Body & Intermediate body: Brass CW603N
Cover: Zamak3
Spring plate: Zinc Plated Steel
Inside Spring: Monel KS00
Setting Spring: Steel
Seat: PTFE TFM 1700
Diaphragm: Neoprene Rubber
Incapsulated filter: Cupro Nickel

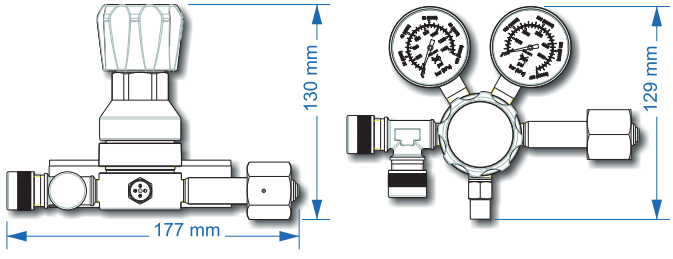

Product details

Gas	Inlet Pressure	Outlet Pressure	Content Pressure Indicator	Delivery Pressure indicator	Operating Temperature Range
Nitrogen	Up to 300 bar	0-35 bar	Gauge	Gauge	-20°C to +65°C
		0-60 bar			

REFRIGERANT GASES FILLING HEAD FOR HANDWHEEL VALVES
Manually Operated with Anti-filling opener


Reference Image

Materials and standards

The Filling Head is made of corrosion-resistant materials such as stainless steel, brass, aluminium and special polymers. The rubber materials used are developed and manufactured according to the requirements of EN 549 and ISO 11114/2.

Features

- Limited gas leakage when the gas flow is cut off and the filling head is removed from the cylinder valve.
- Includes an anti-filling device opener that kicks in when the handle is switched to start the filling operation.
- Connected and disconnected manually, by rotating the threaded ring nut.
- Slim design for easy use to fit any shroud.
- Chrome plated surface for long life.

Inlet connection:

Refrigerant gas: W21,7 x 1/14" RH male, 625-18 UNF-2A-RH-EXT (3/8" SAE FLARE)

Outlet connection:

- Compatible with the following valve outlet threads:
  - W21,7 x 1/14" RH male
  - W21,8 x 1/14" RH/LH male
- Suitable for valves with or without PRV.

Supply pressures:

Designed to operate within the normal supply pressures.
Liquid filling product: 1-50 bar.
Filling time approx. 2 sec./Kg liquid at 7 bar differential pressure.

Function and Maintenance:

The Filling Head is easy to use. The anti-fill opener spindle is connected to the anti-filling device of the cylinder valve; then the threaded end of the ring nut is connected to the valve outlet to make a tight connection. At this point, the lever needs to be operated to allow the gas to start filling the cylinder.
When the cylinder is filled, the filling process ends by operating the lever again, and the ring nut can be disconnected from the valve outlet. At this point, the anti-filling opener spindle can also be disconnected, and the filling head removed from the cylinder valve.
All rubber seals in contact with the gas can be replaced.

Part Number	Inlet Connection	Outlet Connection
6882900108	REFRIGERANT GAS W21,7 x 1/14" RH.	W21,7 x 1/14" RH.
6882900115	625-18 UNF-2A-RH-EXT 3/8" SAE FLARE	W21,7 x 1/14" RH.
6882900163	REFRIGERANT GAS W21,7 x 1/14" RH.	W21,8 X 1/14" LH.

REFRIGERANT GASES FILLING HEAD FOR HANDWHEEL VALVES
Manually Operated with Ant-filling opener


Reference Image

Materials and standards

The Filling Head is made of corrosion-resistant materials such as stainless steel, brass, aluminium and special polymers. The rubber materials used are developed and manufactured according to the requirements of EN 549 and ISO 11114/2.

Features

- Limited gas leakage when the gas flow is cut off and the filling head is removed from the cylinder valve.
- Includes an anti-filling device opener that kicks in when the handle is switched to start the filling operation.
- Connected and disconnected manually, by rotating the threaded ring nut.
- Slim design for easy use to fit any shroud.
- Chrome plated surface for long life.

Inlet connection:
Refrigerant gas: G 3/8".

Outlet connection:
- Compatible with the following valve outlet threads:
  - 1,030 x 14 NGO RH
  - CGA660
- Suitable for valves with or without PRV.

Supply pressures:
Designed to operate within the normal supply pressures.
Liquid filling product: 1-50 bar.
Filling time approx. 2 sec./Kg liquid at 7 bar differential pressure.

Function and Maintenance:
The Filling Head is easy to use. The anti-fill opener spindle is connected to the anti-filling device of the cylinder valve; then the threaded end of the ring nut is connected to the valve outlet to make a tight connection. At this point, the lever needs to be operated to allow the gas to start filling the cylinder.
When the cylinder is filled, the filling process ends by operating the lever again, and the ring nut can be disconnected from the valve outlet. At this point, the anti-filling opener spindle can also be disconnected, and the filling head removed from the cylinder valve.
All rubber seals in contact with the gas can be replaced.

Part Number	Inlet Connection	Outlet Connection
6882900114	REFRIGERANT GAS G 3/8"	1,030 x 14 NGO RH, CGA660
6882900126 (Short version)	REFRIGERANT GAS G 3/8"	1,030 x 14 NGO RH, CGA660

REFRIGERANT GASES FILLING HEAD FOR HANDWHEEL VALVES
Manually Operated

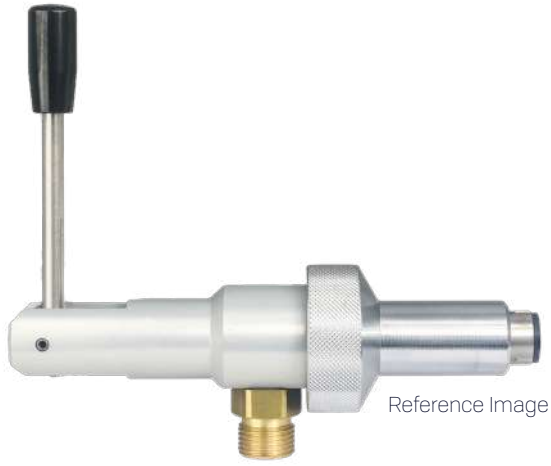
Reference Image

Materials and standards

The Filling Head is made of corrosion-resistant materials such as stainless steel, brass, aluminium and special polymers. The rubber materials used are developed and manufactured according to the requirements of EN 549 and ISO 11114/2.

Features

- Limited gas leakage when the gas flow is cut off and the filling head is removed from the cylinder valve.
- Includes an anti-filling device opener that kicks in when the handle is switched to start the filling operation.
- Connected and disconnected manually, by rotating the threaded ring nut.
- Slim design for easy use to fit any shroud.
- Chrome plated surface for long life.

Inlet connection:

Refrigerant gas: W21,7 x 1/14" RH.

Outlet connection:

- Compatible with the following valve outlet thread: W21,7 x 1/14" RH.
- Suitable for valves with or without PRV.

Supply pressures:

Designed to operate within the normal supply pressures.
Liquid filling product: 1-50 bar
Filling time approx. 2 sec./Kg liquid at 7 bar differential pressure.

Function and Maintenance:

The Filling Head is easy to operate. The threaded end of the ring nut is connected to the valve outlet to make a tight connection. At this point, the lever needs to be operated to allow the gas to start filling the cylinder.
When the cylinder is filled, by operating the lever again, the filling process ends, and the ring nut can be disconnected from the valve outlet.
All rubber seals in contact with the gas can be replaced.

Part Number	Inlet Connection	Outlet Connection
6882900121	REFRIGERANT GAS W21,7 x 1/14" RH.	W21,7 x 1/14" RH.

REFRIGERANT GASES FILLING HEAD FOR HANDWHEEL VALVES
Semi-automatic

Materials and standards

The Filling Head is made of corrosion-resistant materials such as stainless steel, brass, aluminium and special polymers. The rubber materials used are developed and manufactured according to the requirements of EN 549 and ISO 11114/2.

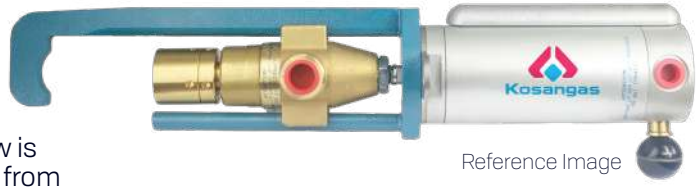

Reference Image

Features

- Insignificant gas leakage when the gas flow is interrupted, and the filling head is released from the cylinder valve.
- Includes an anti-filling device opener.
- Balanced jig for easy suspension between filling operations.
- Easy to manually connect and disconnect. Filling starts at the same time as connection to the valve.
- Slim design for easy use to fit any shroud.

Inlet connection:

Refrigerant: 3/8" GAS
Pneumatic air: 1/4" GAS.

Outlet connection:

- Compatible with the standard outlet male threads: G1, G2, G4, G5, G6, G8, G11, G12 according to EN 15202.
- Suitable for valves with or without PRV.

Supply pressures:

Designed to operate within the normal supply pressures.
Pneumatic supply: 6 - 10 bar. Liquid filling product: 1-50 bar.
Filling time approx. 2 sec./Kg liquid at 7 bar differential pressure.

Function and Maintenance:

The Filling Head is easy to operate.
The clamping brace is placed around the neck of the cylinder valve.
Once the Filling Head outlet is aligned with the cylinder valve outlet, the ball nose is pushed to allow the compressed air to fill the pneumatic cylinder.
This forces the Filling Head outlet to attach the cylinder valve outlet, thereby obtaining a leak tight connection and simultaneously opening the gas seal, starting the FREON flow. After completing the filling operation, the handle on the side of the pneumatic cylinder is pushed and the air pressure is released, thus interrupting the gas flow, and disconnecting the outlet from the valve.
All rubber seals inside the gas section and the entire pneumatic cylinder can be replaced.

Part Number	Inlet Connection	Outlet Connection
6882900043	REFRIGERANT GAS 3/8" AIR 1/4"	Standard Hand wheel male outlet with and without SRV Type 129A

REFRIGERANT GASES FILLING HEAD FOR HANDWHEEL VALVES
Semi-automatic

Materials and standards

The Filling Head is made of corrosion-resistant materials such as stainless steel, brass, aluminium and special polymers. The rubber materials used are developed and manufactured according to the requirements of EN 549 and ISO 11114/2.

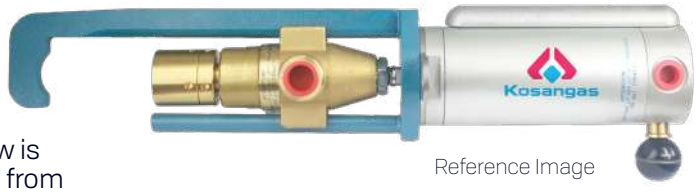

Reference Image

Features

- Insignificant gas leakage when the gas flow is interrupted, and the filling head is released from the cylinder valve.
- Includes an anti-filling device opener.
- Balanced jig for easy suspension between filling operations.
- Easy to manually connect and disconnect. Filling starts at the same time as connection to the valve.
- Slim design for easy use to fit any shroud.

Inlet connection:

Refrigerant gas: 3/8" G
Pneumatic air: 1/4" G.

Outlet connection:

- Compatible with the standard outlet male threads: G1, G2, G4, G5, G6, G8, G11, G12 according to EN15202.
- Suitable for valves with or without PRV.

Supply pressures:

Designed to operate within the normal supply pressures.
Pneumatic supply: 6 - 10 bar. Liquid filling product: 1-50 bar
Filling time approx. 2 sec./Kg liquid at 7 bar differential pressure.

Function and Maintenance:

The Filling Head is easy to operate.
The clamping brace is placed around the neck of the cylinder valve.
Once the Filling Head outlet is aligned with the cylinder valve outlet, the ball nose is pushed to allow the compressed air to fill the pneumatic cylinder.
This forces the Filling head outlet to attach the cylinder valve outlet, thereby obtaining a leak tight connection. Then, simultaneously, the gas seal opens initiating the flow of refrigerant gas into the cylinder. After completing the filling operation, the handle on the side of the pneumatic cylinder is pushed and the air pressure is released, thus interrupting the gas flow, and disconnecting the outlet from the valve.
All rubber seals inside the gas section and the entire pneumatic cylinder can be replaced.

Part Number	Inlet Connection	Outlet Connection
6882900105	REFRIGERANT GAS 3/8" PNEUMATIC AIR 1/4"	1/4" SAE Flare valve outlet with and without SRV

REFRIGERANT GASES FILLING HEAD FOR HANDWHEEL VALVES
Semi-automatic with Anti-filling opener

Materials and standards

The Filling Head is made of corrosion-resistant materials such as stainless steel, brass, aluminium and special polymers. The rubber materials used are developed and manufactured according to the requirements of EN 549 and ISO 11114/2.

Reference Image

Features

- Insignificant gas leakage when the gas flow is interrupted, and the filling head is released from the cylinder valve.
- Includes an anti-filling device opener.
- Balanced jig for easy suspension between filling operations.
- Easy to manually connect and disconnect. Filling starts at the same time as connection to the valve.
- Slim design for easy use to fit any shroud.

Inlet connection:

Refrigerant: 3/8" GAS
Pneumatic air: 1/4" GAS.

Outlet connection:

- Compatible with the standard outlet male threads: G1, G2, G4, G5, G6, G8, G11, G12 according to EN 15202.
- Suitable for valves with or without PRV.

Supply pressures:

Designed to operate within the normal supply pressures.
Pneumatic supply: 6 - 10 bar. Liquid filling product: 1-50 bar.
Filling time approx. 2 sec./Kg liquid at 7 bar differential pressure.

Function and Maintenance:

The Filling Head is easy to operate. The clamping brace is placed around the neck of the cylinder valve while the central maintenance anti-filling opener pin is connected to the end of the anti-filling device spindle. Once the Filling Head outlet is aligned with the cylinder valve outlet, the ball nose is pushed to allow the compressed air to fill the pneumatic cylinder. This forces the Filling Head outlet to attach the cylinder valve outlet, thereby obtaining a leak tight connection. Then the anti-filling device is opened and simultaneously the gas seal opens, initiating the flow of refrigerant gas into the cylinder. After completing the filling operation the handle on the side of the pneumatic cylinder is pushed and the air pressure is released, thus interrupting the gas flow, closing the anti-filling device and disconnecting the filling head outlet from the cylinder valve. All rubber seals inside the gas section and the entire pneumatic cylinder can be replaced.

Part Number	Inlet Connection	Outlet Connection
6882900065	REFRIGERANT GAS 3/8" PNEUMATIC AIR 1/4"	Standard Hand wheel male outlet with and without SRV
6882900127 **(Stronger version)**	REFRIGERANT GAS 3/8" PNEUMATIC AIR 1/4"	Standard Hand wheel male outlet with and without SRV
6882900134	REFRIGERANT GAS 3/8" PNEUMATIC AIR 1/4"	Standard Hand wheel male outlet with and without SRV

REFRIGERANT GASES FILLING HEAD FOR HANDWHEEL VALVES
Semi-automatic with Anti-filling opener

Materials and standards

The Filling Head is made of corrosion-resistant materials such as stainless steel, brass, aluminium and special polymers. The rubber materials used are developed and manufactured according to the requirements of EN 549 and ISO 11114/2.

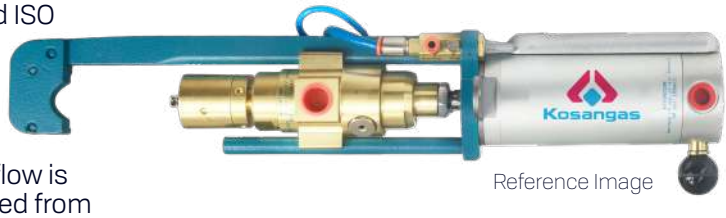

Reference Image

Features

- Insignificant gas leakage when the gas flow is interrupted, and the filling head is released from the cylinder valve.
- Includes an anti-filling device opener.
- Balanced jig for easy suspension between filling operations.
- Easy to manually connect and disconnect. Filling starts at the same time as connection to the valve.
- Slim design for easy use to fit any shroud.

Inlet connection:

Refrigerant: 3/8" GAS
Pneumatic air: 1/4" GAS.

Outlet connection:

- Compatible with the valve outlet male threads: 1,030"-14 NGO-RH-EXT, CGA660.
- Suitable for valves with or without PRV.

Supply pressures:

Designed to operate within the normal supply pressures.
Pneumatic supply: 6 - 10 bar. Liquid filling product: 1-20 bar
Filling time approx. 2 sec./Kg liquid at 7 bar differential pressure.

Function and Maintenance:

The Filling Head is easy to operate.
The clamping brace is placed around the neck of the cylinder valve while the central anti-filling opener pin is connected to the end of the anti-filling device spindle.Once the Filling Head outlet is aligned with the cylinder valve outlet, the ball nose is pushed to allow the compressed air to fill the pneumatic cylinder.
This forces the Filling Head outlet to attach the cylinder valve outlet, thereby obtaining a leak tight connection. Then, simultaneously, the gas seal opens, initiating the flow of refrigerant gas into the cylinder. After completing the filling operation, the handle on the side of the pneumatic cylinder is pushed and the air pressure is released, thus interrupting the gas flow, closing the anti-filling device and disconnecting the filling head outlet from the cylinder valve.
All rubber seals inside the gas section and the entire pneumatic cylinder can be replaced.

Part Number	Inlet Connection	Outlet Connection
6882900128	REFRIGERANT GAS 3/8" PNEUMATIC AIR 1/4"	1,030"-14 NGO-RH-EXT, CGA660 male outlet with and without SRV

REFRIGERANT GASES FILLING HEAD FOR HANDWHEEL VALVES
Semi-automatic with Anti-filling opener for filling line evacuation

Materials and standards

The Filling Head is made of corrosion-resistant materials such as stainless steel, brass, aluminium and special polymers. The rubber materials used are developed and manufactured
according to the requirements of EN 549 and ISO 11114/2.

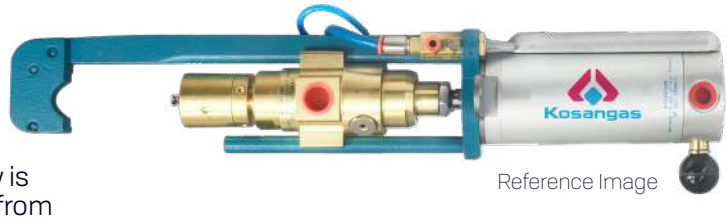

Reference Image

Features

- Insignificant gas leakage when the gas flow is interrupted, and the filling head is released from the cylinder valve.
- Includes an anti-filling device opener.
- Balanced jig for easy suspension between filling operations.
- Easy to manually connect and disconnect. Filling starts at the same time as connection to the valve.
- Slim design for easy use to fit any shroud.
- Equipped with a gas recovery system.

Inlet connection:

Refrigerant: 3/8" GAS
Pneumatic air: 1/4" GAS.

Outlet connection:

- Compatible with the standard outlet male threads: G1, G2, G4, G5, G6, G8, G11, G12 acc. to EN15202.
- Suitable for valves with or without PRV.

Supply pressures:

Designed to operate within the normal supply pressures.
Pneumatic supply: 6 - 10 bar. Liquid filling product: 1-20 bar
Filling time approx. 2 sec./Kg liquid at 7 bar differential pressure.

Function and Maintenance:

The Filling Head is easy to operate. The clamping brace is placed around the neck of the cylinder valve while the central maintenance anti-filling opener pin is connected to the end of the anti-filling device spindle. Once the Filling Head outlet is aligned with the cylinder valve outlet, the ball nose is pushed to allow the compressed air to fill the pneumatic cylinder.
This forces the Filling Head outlet to attach the cylinder valve outlet, thereby obtaining a leak tight connection. Then the anti-filling device is opened and simultaneously the gas seal opens, initiating the flow of refrigerant gas into the cylinder. After completing the filling operation, the handle on the side of the pneumatic cylinder is pushed and the air pressure is released, thus interrupting the gas flow, closing the anti-filling device and disconnecting the filling head outlet from the cylinder valve.
All rubber seals inside the gas section and the entire pneumatic cylinder can be replaced.

Part Number	Inlet Connection	Outlet Connection
6882900112	REFRIGERANT GAS 3/8" AIR 1/4"	Standard Handwheel male outlet with and without SRV

FILLING HEAD VALVES FOR REFRIGERANT GASES

Valve Model		Semi-Automatic Filling Heads	Manual Filling Heads
	"W21,7 x 1/14" RH +/- anti-filling	/	6882900108 6882900115
	"W21,8 x 1/14"" RH +/- anti-filling	/	6882900163
	W21,7 x 1/14" RH +/- anti-filling (7601900193) W21,8 x 1/14" RH +/- anti-filling	6882900065	6882900121
	W21,7 x 1/14" LH +/- anti-filling (7601900193) W21,8 x 1/14" LH +/- anti-filling (7601900420)	6882900065	/
	1,030 x 14 NGO RH, CGA660 +/- anti-filling	6882900128	6882900114 (short version) 6882900126 (short version)
	Std. male outlets - anti-filling	6882900043	/
	Std. male outlets +/- anti-filling (7601900429)	6882900065 6882900112 6882900127	/
	1/4" SAE Flare -anti-filling	6882900105	/
	W21,8 x 1/14" RH +/- anti-filling (example 7601900333)	6882900134	/

Our Global Product Brands

The Cavagna Group logo is a registered trademark of Cavagna Group SPA. The following are registered trademarks of Cavagna Group Spa or property of other companies belonging to the group:
RECA, KOSAN +, KOSANGAS, CEMCO KOSANGAS, OMECA, N.P., BIGAS, MESURA, MESURA METERING, GREENGEAR and VIPROXY.

Manufacturing Facilities

5CA1416W - Rev 3.1 Eng - 09/22

Wherever gas is used, we are there

CAVAGNA GROUP SPA
Via Statale 11/13 - Frazione Ponte San Marco
25011 Calcinato - Brescia (Italy)
Tel. 0039 030 9663111 - Fax 0039 030 9969014
info@cavagnagroup.com
www.cavagnagroup.com